MADSEN

SUB-MACHINE GUN

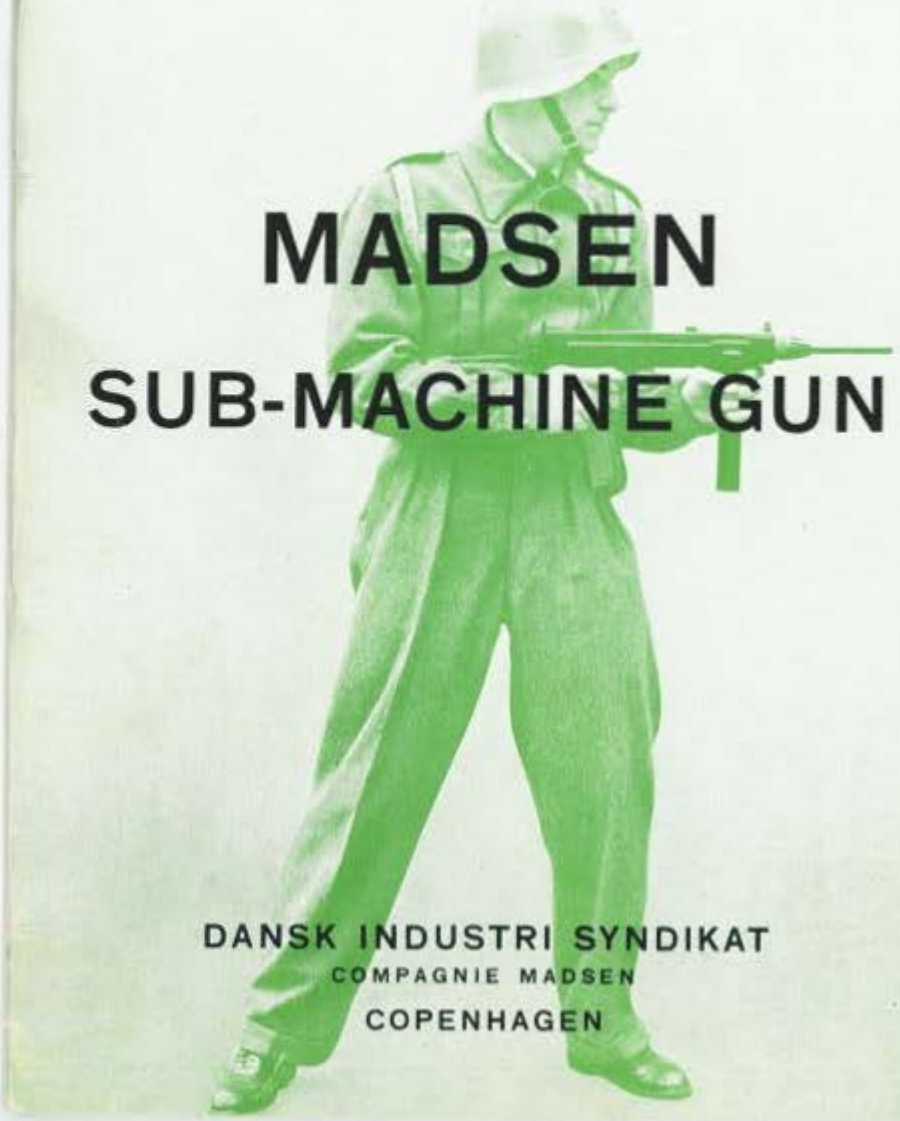

DANSK INDUSTRI SYNDIKAT

COMPAGNIE MADSEN

COPENHAGEN

20

HANDBOOK

for the

MADSEN
SUB-MACHINE GUN

DANSK INDUSTRI SYNDIKAT
COMPAGNIE MADSEN
COPENHAGEN

CONTENTS

PRINCIPLE OF DESIGN

The MADSEN sub-machine gun was developed to fill the need for a sub-machine gun which would be absolutely reliable, and still a lightweight weapon, combining the fewest possible parts with simplicity of manufacture. This aim was achieved mainly by means of a special safety device to exclude accidental firing, and a flat shape of the frame, this latter being divided vertically in longitudinal section permitting the two halves, which are hinged at the rear and form the receiver, the magazine housing and the pistol grip, to be opened like a box.

Constructed in this manner the MADSEN sub-machine gun is easy to strip for inspecting and cleaning; furthermore all the parts are easy to survey, so that the action of the gun is easily learned. The sub-machine gun has a bottom-mounted magazine, and it is fitted with a carrying sling which, owing to the flat shape of the gun, permits it to be carried hanging on the gunner's back, the sling over his left shoulder, muzzle downwards and magazine inserted, thereby enabling the gunner to open fire almost instantaneously in case of surprise encounters. It is equiped with a folding skeleton butt, and the gun can be fired with this shoulder piece extended or with the shoulder piece folded.

Most of the sub-machine guns developed during the Second World War have the fault that it is dangerous to carry the weapon with a loaded magazine inserted and the mechanism cocked, as a jar may fire it, and a shot may also be fired accidentally by a cocking motion being performed too short; in the MADSEN sub-machine gun there is, in addi-

tion to an ordinary safety device acting on the trigger mechanism, also a front safety, the breech block retainer, which prevents the gun from being fired without the gunner having his hand round the magazine housing to support the gun and simultaneously releasing the breech block retainer, the release of which does not require any attention as his thumb in the most natural way presses against the downward lever of the breech block retainer.

The rate of fire is 500—550 rounds per minute, which is generally considered to be very nearly the ideal rate for sub-machine guns used in full automatic fire; the gun was deliberately slowed down to this figure.

Normally it is chambered for the 9 mm Parabellum pistol cartridge, but it can also be chambered for the standard .45 automatic pistol cartridge without increasing the weight of the gun. While it is normally intended to be used at a range under 100 metres, it may be used still with good accuracy up to 200 metres.

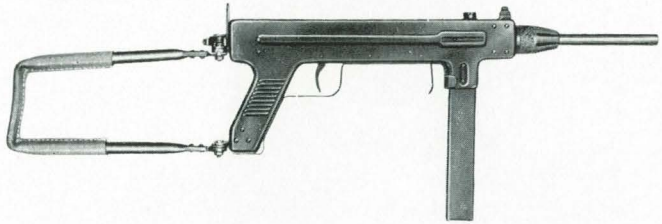

Fig. 1.
MADSEN sub-machine gun with extended shoulder piece.
The total length of the gun is now 780 mm.
Weight 3 kg.
The magazine holds 32 rounds.

Fig. 2.
MADSEN sub-machine gun with closed shoulder piece.
The total length is now 530 mm.

SHORT DESCRIPTION OF THE MAIN PARTS

Data of the MADSEN sub-machine gun:

Calibre	9 mm
Weight without magazine and sling .	3.15 kg
Weight of empty magazine	200 g
Weight of filled magazine	590 g
Length of barrel	200 mm
Length with shoulder piece extended	780 mm
Length with shoulder piece folded ...	530 mm
Rate of fire	500—550 rounds per min.

The sub-machine gun consists of the following main parts:

The frame,
the barrel,
the breech block with cocking handle,
the return spring,
the trigger mechanism,
the safety devices,
the magazine and
the shoulder piece.

The **frame** consists of two almost identical pieces of pressed sheet steel, shaped with pistol grip and magazine housing. The two parts are hinged at the rear, and at the fore end assembled and locked by the barrel-bearing nut.

The left half, which acts as a lid on the right half, carries the sling swivels and also the sights consisting of the foresight and the backsight; the foresight is blade shaped and capable of lateral adjustment, the backsight is a fixed aperture sight. The gun is sighted for 100 m range.

The outer walls of the frame have a smooth surface, and when the magazine is in position, the frame is dustproof. The left inner wall has at the front end a projecting rib, which acts as ejector. In the right wall of the frame is an opening for ejection of the spent cartridge case.

The **barrel** has a smooth exterior with no radiating rings, and the bore has 4 grooves. The breech end of the barrel rests in the breech section of the frame and has an external rib which fits into a corresponding groove in the two frame halves and prevents the barrel from moving in longitudinal direction; on the left side of the barrel-chamber a groove is cut away, corresponding to the ejector rib, thus preventing the barrel from rotating.

The **breech block** moves inside the frame on the bottom wall of the right frame part. The firing pin is stationary in the breech block, but removable. In a groove at the front end of the right side of the breech block is placed the extractor which is secured by means of a vertical pin.

The **cocking handle** has a downward pointing plug which passes through a slot at the top of the frame between the two frame parts and enters the cocking handle hole in top of the breech block and secured by means of a pin.

The **return spring** is placed in a pilot hole of the breech block. The rear end of the return spring works against the spring base which is loosely inserted in the frame against the rear wall of the right frame part; at its fore end the spring base has a protruding tubular spring guide.

The **trigger mechanism** is placed at the bottom of the right frame part. It consists of the trigger and the trigger rod with their respective springs; the trigger rod is forced upwards by its spring to catch in a notch at the bottom of the breech block when the latter is in cocked position. The long arm of the trigger, projecting downwards through an opening in the bottom wall of the right frame part, is protected by a trigger guard.

The **safety devises** are two:

The **safety catch,** which can only be applied when the breech block is in cocked position, is placed at the bottom of the frame and is working on the trigger rod. A finger piece at the left end of the safety catch passes through a short slot in the left frame part, and pushing it backward will lock the trigger rod.

The **breech block retainer** is also placed at the bottom of the frame, but somewhat forward of the safety catch, and it works on the breech block and prevents it from moving completely forward.

The **magazine** is of the box type, holding 32 cartridges. It is inserted from below into the magazine housing, and it is locked in position by means of the magazine catch at the rear wall of the magazine housing; the magazine catch is released by pushing it backward. The magazine can be inserted whether the breech block is in its forward or its rear (cocked) position. When the breech block is in its forward position, a little more force must be exerted to insert the magazine as the top cartridge presses against the underside of the breech block.

The **shoulder piece** is a skeleton butt; the skeleton is of steel tubing, partly leather-covered.

It is hinged to the rear end of the right frame part, the lower hinge being behind the pistol grip. It is retained in extended and in folded position by means of a notch and a lug in the hinge, and it can be moved from the one position to the other by a slight jerk. By means of the lock on the upper shoulder piece bolt the shoulder piece can be locked in extended position. When swung forward it lies partly along the right side of the frame, and in this position it is very compact, making it possible to use the weapon as an automatic pistol using both hands.

ACTION OF THE GUN

The MADSEN sub-machine gun has simple blowback action, i. e. the relatively heavy weight of the breech block and the tension of the return spring hold the breech closed until breech pressure drops to safe limits after firing.

Starting from loaded and cocked position, i. e. the loaded magazine inserted in the magazine housing and the breech block in its rear position caught by the trigger rod, the action is as follows:

When the trigger is pressed its forward pointing arm moves the trigger rod downwards out of its contact with the breech block. The compressed return spring is now free to drive the breech block forward, and if the breech block retainer is pressed forward, the breech block will run completely forward, and during this movement it will strip the top cartridge from between the cutaway lips of the magazine and push it forward. The bullet nose is guided by the barrel feed of the breech section of the frame up into the chamber as the rear of the cartridge clears the lips of the magazine, and as it enters the chamber the cartridge lines up with the firing pin fixed in the breech block, enabling the firing pin to hit the cap of the cartridge whereby the round is fired. At this time the extractor on the right side of the breech block is sprung over the groove in the cartridge case.

The powder gases generated in the cartridge case drive the bullet forward and thrust the cartridge case backwards against the face of the breech block. The breech block starts

to move to the rear, but in view of much greater weight of the breech block and the return spring tension in relation to the comparatively light bullet weight, the chamber is not opened appreciably until the bullet has left the muzzle. By this time the breech pressure has dropped to safe limit.

As the breech block starts to the rear, the now empty cartridge case is held at the face of the breech block gripped by the extractor and drawn out of the chamber. When it clears the chamber the left side of its head is struck against the ejector, and the case is pivoted out through the ejection opening.

The breech block continues to travel to the rear, and as it passes the mouth of the magazine, the magazine spring forces the next cartridge slightly upwards ready to be picked up on the forward motion.

The return spring is compressed and the breech block travels back on the tracks in the frame walls until the energy is absorbed; the cocking handle travels with its plug in the cocking slot, which is long enough to permit it to travel still further to the rear than required for just cocking the gun, thus preventing a sudden shock to the plug.

If the trigger is not actuated any more, the trigger rod, forced up by the trigger rod spring, catches in the underside of the breech block, holding it ready for the next shot. If the trigger is still pressed, the breech block will, however, not being engaged by the trigger rod, move forward pushed by the return spring, and this cycle of operation continues as long as the trigger is pressed and there are any rounds left in the magazine.

Fig. 3.
MADSEN sub-machine gun
carried on guard duty.

From this position the gun can be shifted round to the back, the muzzle pointing downwards to the right.

Fig. 4.
MADSEN sub-machine gun
carried on the march.

Fig. 5.

Fig. 6.

Firing the MADSEN sub-machine gun.

FIRING

The sub-machine gun can be fired from many different positions, but whether firing from the hip, kneeling, sitting, standing or prone, the correct grip is always with left hand firmly round the magazine housing, the thumb pressing against the breech block retainer, and with the right hand round the pistol grip and as usual pressing the trigger when a burst is to be fired. Single shots may be fired by quickly releasing the trigger, the normal, however, being short bursts of two or three rounds.

It should always be remembered that this weapon fires when the breech block goes fully forward; if the breech block retainer, however, is not released, the breech block will be stopped on its way forward and no round will be fired. In order to continue firing the cocking handle must then be pulled back as far as it will go. Accidental firing caused by an incomplete cocking motion or by an unintended rearward movement of the breech block as a result of a shock to the gun if dropped or laid down hard, is also excluded owing to the breech block retainer.

Fig. 7.
The prone position.

Magazine resting on the ground.

INSTRUCTIONS

FOR LOADING THE MAGAZINE AND FOR STRIPPING AND ASSEMBLING THE GUN

Loading the magazine. A special magazine loading apparatus is issued with each sub-machine gun and can be carried inside the pistol grip. It consists of a short housing into which the magazine can be inserted; on top of the housing is a spring-actuated button. By pushing down firmly on the button the magazine spring and any cartridge will be pressed down by a plunger.

Hold the loading apparatus and the magazine together by the left hand in such a manner that the thumb can press the button; the magazine must be supported in a suitable manner. Insert a round under the lips of the magazine mouth, base first, with the right hand, release the button when the cartridge encounters the plunger of the apparatus and press the cartridge in until it meets the rear wall of the magazine. Repeat these actions until the magazine is filled.

If no loading apparatus is available, cartridges may be inserted by hand.

Stripping and assembling the gun. Following parts can be removed without tools: barrel-bearing nut, barrel, spring base, return spring and breech block with cocking handle. When these are removed, the frame is easily accessible for cleaning inside.

When the sub-machine gun is to be stripped, the magazine must be withdrawn, the shoulder piece folded and the breech block in its forward position. The first thing to do is to unscrew the barrel-bearing nut.

Lay the gun on its right side on table or knee. Open the frame by pulling at the front sling swivel with the right hand, the left hand pressing against the barrel. Remove the barrel.

Remove the return spring by pressing the spring base forward and upwards, whereafter the return spring can be withdrawn from the pilot hole in the breech block. Lift the breech block up. Any further stripping should be done only by qualified armourer.

After cleaning the parts should be oiled very lightly. Assembly is carried out in opposite order.

The magazine can be cleaned by removing the bottom.

Fig. 8.

COMPONENTS OF GUN

1 Barrel-bearing nut
2 Sling swivel
3 Ejector
4 Extractor pin
5 Extractor
6 Breech block
7 Frame half (left)
8 Frame half (right)
9 Safety catch
10 Sling swivel
11 Barrel
12 Barrel bearing
13 Corn
14 Firing pin
15 Cocking handle
16 Return spring
17 Breech block retainer
18 Trigger rod
19 Trigger
20 Trigger plate
21 Return spring guide (complete)
22 Rear sight plate
23 Shoulder piece bolt (upper)
24 Shoulder piece
25 Shoulder piece spring
26 Firing pin rivet
27 Magazine
28 Magazine catch pin
29 Magazine catch
30 Magazine catch spring
31 Trigger rod pin
32 Trigger rod spring
33 Trigger guard
34 Trigger spring
35 Magazine loading apparatus
36 Shoulder piece bolt (lower)
37 Shoulder piece bolt nut
38 Shoulder piece lock

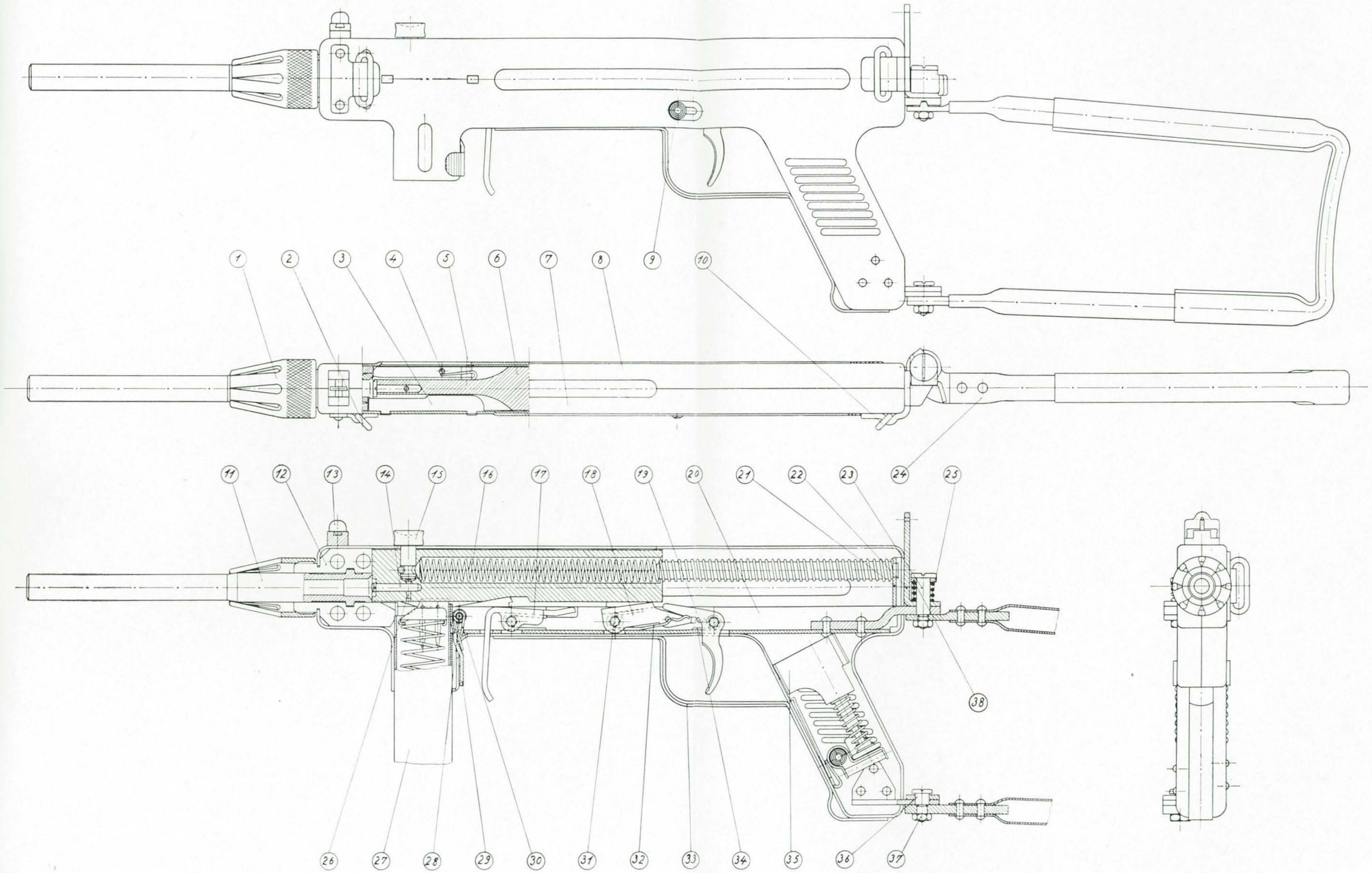
1
2
3
4
5
6
7
8
9
10
11
12
13
14
15
16
17
18
19
20
21
22
23
24
25
26
27
28
29
30
31
32
33
34
35
36
37
38