(No Model.) 2 Sheets—Sheet 1

C. H. R. CLAUSIUS.

RECOIL OPERATED FIREARM.

No. 593,835. Patented Nov. 16, 1897.

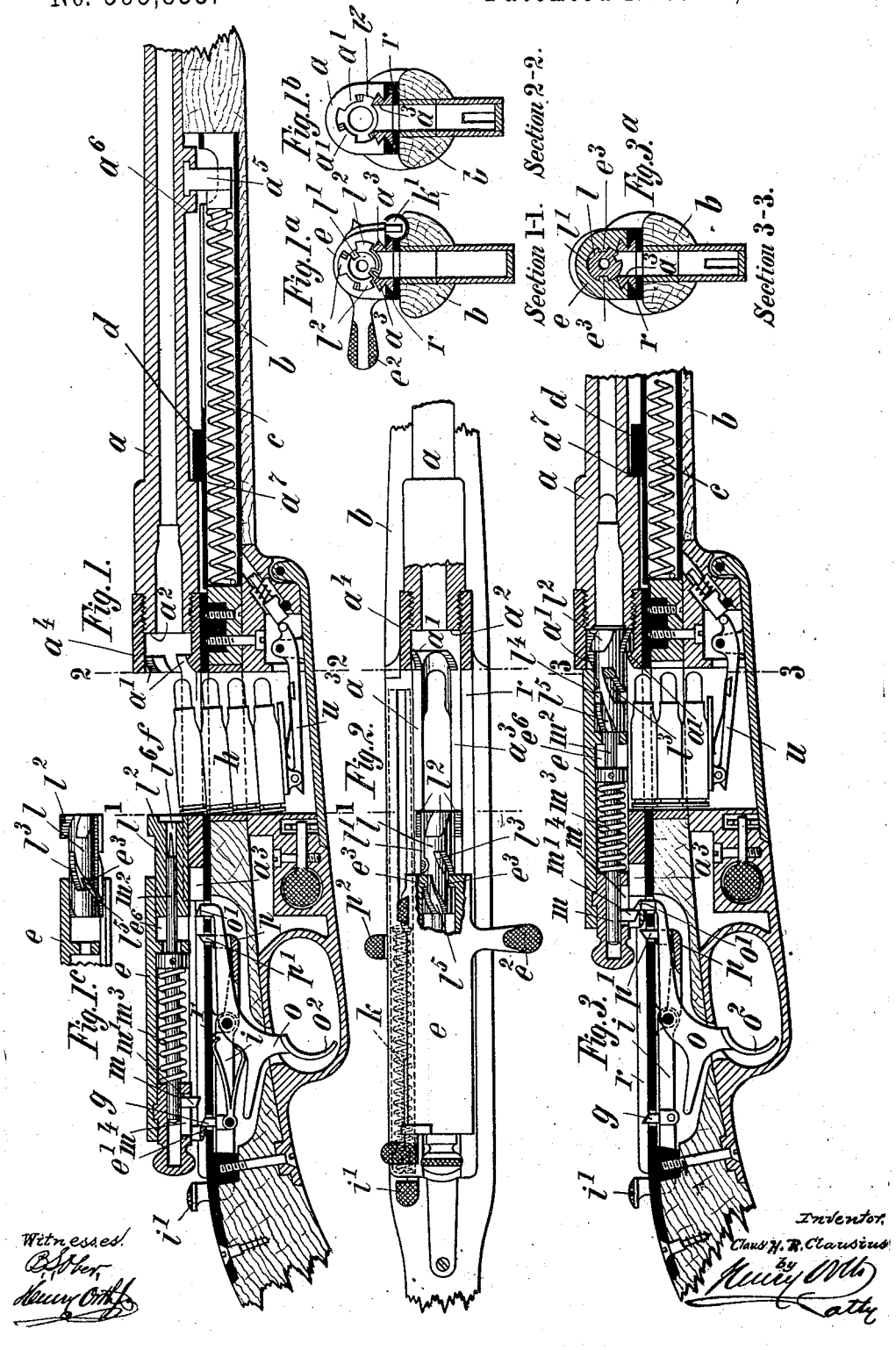

(No Model.)

2 Sheets—Sheet 2.

C. H. R. CLAUSIUS.

RECOIL OPERATED FIREARM.

No. 593,835.

Patented Nov. 16, 1897.

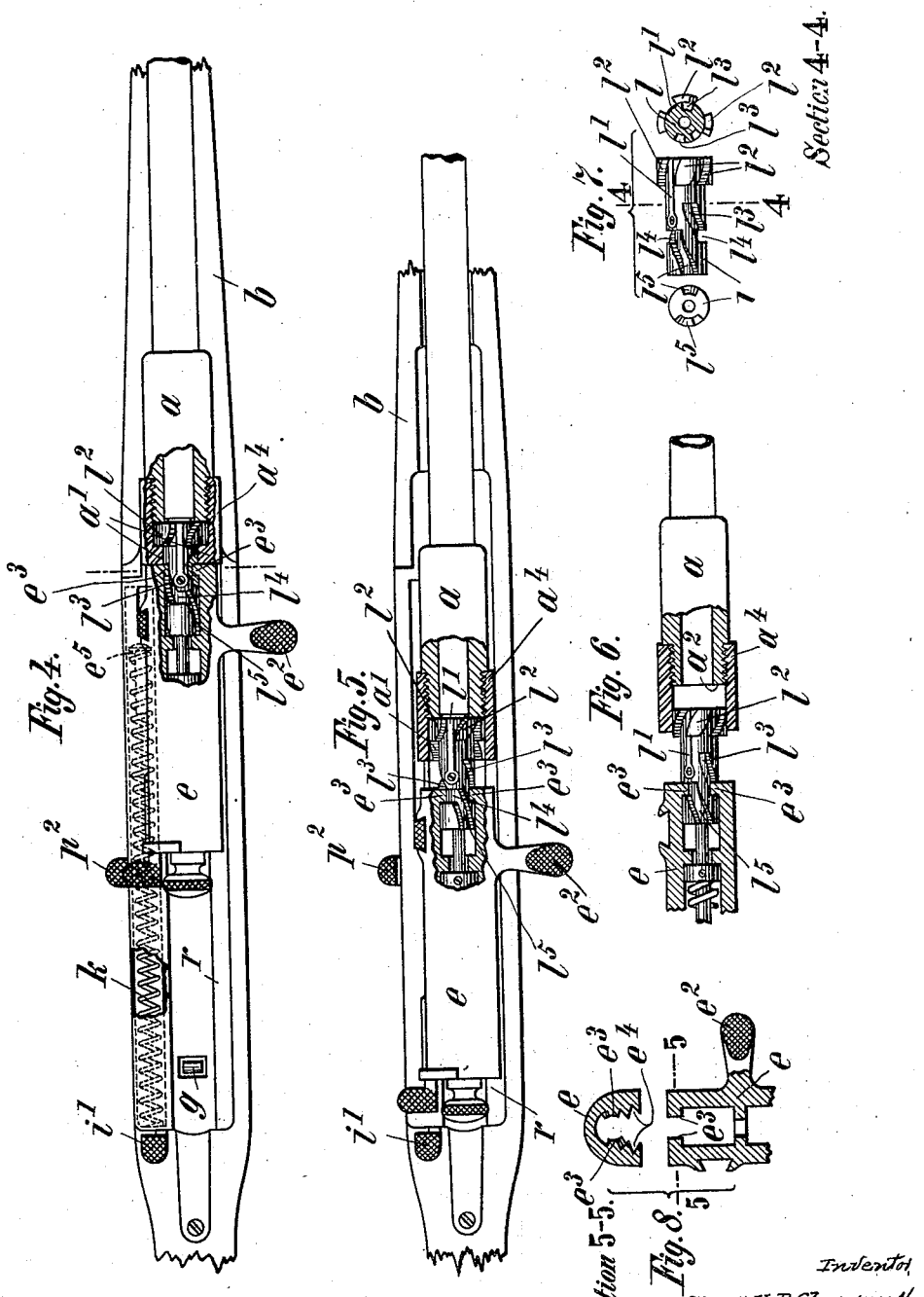

Witnesses,

Inventor,

Claus H. R. Clausius.

by Henry Orth Atty

UNITED STATES PATENT OFFICE.

CLAUS H. R. CLAUSIUS, OF HAMBURG, GERMANY.

RECOIL-OPERATED FIREARM.

SPECIFICATION forming part of Letters Patent No. 593,835, dated November 16, 1897.

Application filed February 5, 1896. Serial No. 578,116. (No model.) Patented in Germany January 29, 1895, No. 87,663; in Belgium November 15, 1895, No. 118,361; in England December 31, 1895, No. 25,042; in Sweden December 31, 1895, No. 7,833; in Italy December 31, 1895, No. 40,515; in Hungary December 31, 1895, No. 7,102; in Norway December 31, 1895, No. 4,728; in Switzerland December 31, 1895, No. 11,481; in France December 31, 1895, No. 252,881, and in Austria February 6, 1896, No. 46/447.

To all whom it may concern:

Be it known that I, CLAUS H. R. CLAUSIUS, a subject of the German Emperor, and a resident of Hamburg, in the German Empire, have invented certain new and useful Improvements in Breech-Loading Firearms, (for which patents have been obtained in the following countries, to-wit: Germany, No. 87,663, dated January 29, 1895; Belgium, No, 118,361, dated November 15, 1895; Great Britain, No. 25,042, dated December 31, 1895; Sweden, No. 7,833, dated December 31, 1895; Italy, No. 40,515, dated December 31, 1895; Hungary, No. 7,102, dated December 31, 1895; Norway, No. 4,728, dated December 31, 1895; Switzerland, No. 11,481, dated December 31, 1895; France, No. 252,881, dated December 31, 1895, and Austria, No. 46/447, dated February 6, 1896,) of which the following is a specification.

My present invention relates to improvements in breech-loading firearms, especially of that class in which the barrel and the breech-bolt are movably arranged, so that they may recoil together in firing, but may be independently forced forward again by spring-power for the purpose of opening or laying bare the loading-chamber of the breech-frame, which class of breech-loaders is known as "straight pull-bolt guns."

The invention comprises a peculiarly-constructed breech-closing head arranged between the breech-bolt and the barrel and adapted to make a turning and sliding movement, which are utilized for coupling or uncoupling the breech-bolt and the barrel accordingly; and the object of the improvements is to secure a reliable closing of the breech by coupling the said movable closing-head of the breech-bolt to the barrel and to permit, on the other hand, an easy and ready uncoupling of the barrel from the temporarily-retained closing-head when the said barrel alone is shifted forward by its spring after the recoil.

To render the present invention properly understood, I will proceed to describe, as an example, a hand-firearm arranged in accordance with the same, reference being had to the accompanying drawings, and to letters of reference marked thereon, which form a part of this specification.

Referring to the drawings, Figure 1 is a longitudinal sectional elevation of so much of a breech-loading gun as will be necessary to illustrate my invention, the parts being shown in their respective positions after firing. Figs. 1^a and 1^b are cross-sections on the lines 1 1 and 2 2 of Fig. 1. Fig. 1^c is a detailed view showing the closing-head in longitudinal side elevation and illustrating the coöperation of the same with the breech-bolt. Fig. 2 is a top plan view, partly in section, of the improved breech-loading gun shown by Fig. 1. Fig. 3 is a similar sectional elevation as Fig. 1, the parts being shown in their respective positions before firing. Fig. 3^a is a cross-section on the line 3 3 of Fig. 3. Fig. 4 is a top plan view of Fig. 3, partly in section. Figs. 5 and 6 are views, partly in section, illustrating the mode of coöperation of the breech-bolt, the closing-head, and the barrel during the forward motion of the latter in order to uncouple the locked breech-bolt or its movable closing-head, respectively, from the barrel. Figs. 7 and 8 are detailed views showing the structural features of the closing-head and the breech-bolt, respectively.

Similar letters refer to similar parts throughout the several views.

The movable barrel a, arranged in a suitable groove of the stock b, is guided in the usual manner in rings attached to the stock, the rings being not shown in the drawings. Upon the rear end of the barrel a is screwed a socket a^4, provided on its interior wall with lugs or projections a'. From the rear end side or surface of this socket there are extending two Ⅿ-shaped slide-rails a^3, engaging a dovetail-shaped guide-groove of the breech-frame or breech-plate r, sunk into the stock b and forming at the same time a part of the path of the breech-bolt e and its movable closing-head l, as will be described later on. A recoil-spring c, arranged in a suitable recess of the stock b and acting upon a shoulder a^5 of the barrel, has the tendency to keep the barrel in its forward position or to return

it thereto. A stop d, striking against suitable shoulders a^6 a^7 of the barrel, is provided to limit the forward and rearward movements of the barrel, Fig. 1.

The socket-like breech-bolt e, carrying a handle e^2 and adjoining the socket a^4 of the barrel, is adapted to slide on the breech-frame r and on the rearwardly-extending rails a^3 of the said socket a^4. In order to give the breech-bolt e a reliable guide during its sliding motion, the breech-bolt is furnished at its lower front part with two interior grooves e^4, engaging or embracing the upper edges of the Σ-shaped rails a^3. (See Figs. 1[a], 3[a], and 8.) The breech-bolt e contains the firing mechanism and the movable closing-head l, which both will be explained more particularly hereinafter. A spring k, placed in a recess k' of the stock or the breech-frame r, respectively, and adapted to act upon a projection e^5 of the breech-bolt e, tends to keep the said breech-bolt e in its forward position or to return it thereto.

On firing, the breech-bolt e, being coupled to the barrel by means of the movable head l, which closes the breech of the said barrel, is recoiled, together with the barrel, by the action of the gases of explosion. The breech-bolt e being thus forced to the rear for a sufficient extent is caught by a stud or nib g, which slips in front of a nose e' on the rear end of the said breech-bolt. Accordingly the latter is locked in its rear position, while the barrel a is shifted forward again under the action of the spring c and thereby becomes automatically uncoupled from the breech-bolt e and its movable head l, respectively, as hereinafter more particularly described. Thus between the barrel and the locked breech-bolt is produced, as clearly shown by Figs. 1 and 2, a free loading-space or loading-chamber f, into which a cartridge h may be inserted by hand or by raising it up through a suitable slot of the frame r from a lower magazine by means of any well-known cartridge-elevator u. When pressure is applied to the outwardly-projecting knob of the lever i, which is mounted in a suitable chamber or recess of the stock and carries the aforesaid stud or nib g, the latter is depressed in front of the nose e' of the breech-bolt, so that the same is released or unlocked from the said nib g and the breech-bolt thereby enabled to slide forward under the action of the lateral spring k. By this forward movement of the breech-bolt e the closing-head l, carried away with it, is caused to push the cartridge that has just been inserted into the loading-chamber f into the barrel and the cartridge-chamber, respectively, and to couple or connect the breech-bolt e with the socket a^4 of the said barrel a in a manner hereinafter described.

The firearm is now loaded and ready for firing, for on the shooting forward of the breech-bolt e a nose m', projecting from the firing-pin m, movably supported in the breech-bolt, will have struck against the nib o' of the trigger-lever o, Fig. 3, and in consequence thereof the forward end m^2 of the said firing-pin m is held back, with the firing-spring m^3 in compression, to such an extent that it does not yet enter into the cartridge contained in the barrel. While the breech-bolt e is shooting forward and pushing the cartridge into the barrel, the cylindrically-shaped breech-closing head l, which is movably inserted into a recess e^6, provided in the fore part of breech-bolt e, and which head has a hole l^6 through it along its axis, projects beyond the forward end m^2 of the firing-pin m and prevents the latter from entering the cartridge. During the last instant of the forward movement only the firing-pin m and the breech-closing head l are held back, (the firing-pin by the nib o' of the trigger-lever, as already mentioned, and the breech-closing head l in a manner hereinafter described,) and the breech-bolt moves forward alone to such an extent that after the disengagement of the trigger-nib o' from the nose m' of the firing-pin m the latter can be shot forward by the firing-spring m^3 in its guide-slot m^4 sufficiently to cause the point at the forward end m^2 of the firing-pin m to penetrate into the cartridge in the barrel and to fire the same. Immediately after the firing the barrel and the breech-bolt connected therewith are moved back again by the backward pressure of the gases, and at the completion of their recoil movement the breech-bolt is retained by the aforesaid nib g, which engages with the nose e' of the breech-bolt e, whereupon the barrel is disconnected and shot forward by the stock-spring c. The empty cartridge-case has meanwhile been held back in the loading-chamber (thus opened) by means of an extractor l' on the breech-closing head l, which engages in the rear annular groove of the cartridge-case, and may be ejected from here in the usual manner.

In the space hollowed out of the stock for the trigger-lever o and the lever i, that carries the stud or nib g, that engages with the nose e' of the breech-bolt, there is also mounted a third lever p, the upturned and forked forward end or nib p' of which projects into the path of the nose e' of the breech-bolt and passes up behind the said nose when the breech-bolt is shot forward, in order that the said breech-bolt may not be thrown back again by the strongly-strained firing-spring m^3 so long as the gun is not fired.

During the forward movement of the breech-bolt the nose e' thereof slides over the inclined top of the forked nib p', while the nose m' of the firing-pin m passes along through the groove thereof. In the same manner when the breech-bolt recoils its nose e' moves over the inclined top of the aforesaid stud or nib g, with which it then engages.

The small lever p is not only provided with the forked nib p', but has its arms divided and pivoted to the pin of the trigger-lever o on opposite sides thereof, the forwardly-projecting arm of said trigger-lever lying and

having motion between the branches or prongs of the forked nib p' of said small lever p, which is also capable of being depressed independently of the trigger-lever by means of a knob p^2, Fig. 2, that projects laterally through the stock b, so as to cause the grooved nib p' of the lever p to release the nose e' of the breech-bolt, whereupon the said breech-bolt shoots back slightly without the shot being fired. Then the breech-bolt may be drawn back completely by means of the handle e^2 on the breech-bolt, the latter or the head l thereof being thereby uncoupled from the barrel (which remains at rest) and the breech-bolt being caught by the nib g engaging the nose e'. Then the cartridge, which has remained undischarged and has been drawn back into the loading space or chamber f by the extractor l', may be taken out—that is to say, the gun may thus be unloaded without firing. In consequence of the shooting back of the breech-bolt the firing-spring m^3 is uncocked, so that the firearm is thereby secured against being fired while the breech-bolt is in this position; but if the shot be fired by pulling the trigger o^2 the trigger-lever o pushes downward the lever p with the grooved nib p', so that this grooved nib is held down out of the path of the breech-bolt, which is driven back with the barrel, because the backward pressure of the explosion-gases is exerted instantaneously and while the finger of the marksman is still holding down the trigger-lever o.

The forwardly-propelling spring k of the breech-bolt and the firing-spring m^3 have a certain peculiar mutual relation during the last instant of the forward movement of the breech-bolt. The propelling-spring k is capable in consequence of the kinetic energy it has received of still compressing the firing-spring m^3, although by that time the resistance of the firing-spring m^3 has become greater than the pushing force of the propelling-spring k and is overcome only with the aid of the aforesaid energy. Consequently, as already stated, the cocked firing-spring m^3 is able to push back the breech-bolt to some extent in opposition to the cocked propelling-spring k after the grooved nib p' is depressed, in order to enable an inserted cartridge to be taken out without being fired. It is, however, not absolutely necessary that the firing-spring m^3 should be more powerful than the uncocked propelling-spring k, because the breech-bolt may also be drawn back by hand (without having been first pushed back by the firing-spring) after the grooved nib p' has been lowered by pressing with the finger upon the corresponding knob p^2, attached to the lever p and projecting outwardly through the stock. Indeed it is very desirable that the propelling-spring k of the breech-bolt and also the stock-spring c of the barrel should be as weak as possible, in order that powder charges of very slight backward pressure and very light projectiles may be used. Consequently the propelling-spring k of the breech-bolt should not be made more powerful than is necessary in view of the described relations between it and the firing-spring m^3.

For the purpose of making the stock-spring c of the barrel a as weak as possible and of consequently being able to employ powder charges having a very weak recoil and projectiles of any desired lightness the lateral surfaces of the usual projections or locking-wings l^2 on the breech-closing head l are not axially rectilinear, but are in the shape of a helix, which has an equal but opposite pitch to that of the groove l^3 in the breech-closing head l, in which groove l^3 engage pins or shoulders e^3, projecting inwardly from the wall of the breech-bolt. (See Figs. 1[c], 3[x], and 8.) The inner projections or lugs a' in the rear socket a^4 of the barrel a have a pitch similar to that of the wings l^2, just described. The helical grooves l^3 in the breech-closing head l terminate at the rear in a groove l^4, which extends at right angles to the axis of the head l and with which there connect the entrance-grooves l^5 for the aforesaid pins e^3 of the breech-bolt, Figs. 4 and 7.

When the breech-closing head l, which closes the rear mouth of the barrel, couples together the barrel a and the breech-bolt e, as shown in Figs. 3 and 4, the front end of the said head l rests or bears against the rear surface a^2 of the barrel a. The wings l^2 of the breech-closing head l are then in front of the lugs a' of the socket a^4, and the shoulders or pins e^3 of the wall of the breech-bolt are in the fore part of the first-mentioned helical grooves l^3 of the breech-closing head l. Thus connected the barrel a and the breech-bolt are recoiled to a sufficient extent by the backward pressure of the gases for effecting the passage of the nose e' of the breech-bolt behind the nib g, whereby the said breech-bolt is caught, as already stated above. The barrel a, which shoots forward again at once, pulls the breech-closing head l forward with it, so that thereby the front helical grooves l^3 of the head l slide along or over the pins e^3 of the breech-bolt. In consequence the breech-closing head l is rotated and its wings l^2 turned in front of the passages between the projections or lugs a' of the socket a^4, whereupon these lugs a' slide forward along the projections or wings l^2 of the head l and rotate them in the same direction as that in which the breech-closing head l is rotated by the helical grooves l^3. Thus all possibility of jamming between the barrel or socket a^4, respectively, and the breech-closing head l is obviated, and the barrel can be projected forward into its firing position by a weak spring, thereby rendering possible the use of powder charges having a small recoil and of light projectiles.

As soon as the pins e^3 of the breech-bolt have entered the perpendicular groove l^4 of the closing-head l the latter is held back and is rotated, still without jamming, only to such

an extent that two of the wings l^2, leaving the rear mouth or socket a^4 of the barrel, rest on the sliding bars a^3, which are extensions of the socket a^4 or its lugs a', respectively, and are guided, as already described, by means of a dovetail-shaped groove of the frame r. The two opposite wings that lie on the first-mentioned bars a^3 prevent, therefore, the breech-closing head l from being further rotated, which, consequently, also in this position—that is to say, unrotated and undisturbed—will be moved forward again with the breech-bolt, when, but not until, the latter is liberated by depressing the nib g. The wings l^2 of the breech-closing head l, moved forward by the released and returning breech-bolt e, pass then in between the locking-lugs a' of the socket a^4, and the breech-closing head l, now rotating, strikes against the rear surface a^2 of the barrel a. The head l then remains stationary in a longitudinal direction and is only in consequence of the further forward movement of the breech-bolt and its pin e^3 rotated to such an extent that its wings l^2 again pass in front of the locking-lugs a', provided in the socket a^4 behind the cartridge-chamber of the barrel and again couple the socket a^4 or barrel a, respectively. The parts thus connected and locked cannot be disconnected by shocks exerted or imparted against the forward surface of the breech-closing head l, while on drawing the barrel from the breech-bolt, or vice versa, the uncoupling takes place quite easily.

Having fully described my invention, what I desire to claim and secure by Letters Patent is—

1. The combination with the endwise-movable barrel provided at its rear end with helical locking-lugs a', of the breech-bolt e and the closing-head l provided with a helical groove of equal but opposite pitch to that of the locking-lugs a' on the barrel and with a peripheral groove l^3 intersecting said helical groove, said breech-bolt engaging said helical groove of the closing-head, substantially as and for the purpose set forth.

2. The combination with the breech-bolt and firing-pin provided with radial lugs e', m', respectively, and the levers i', p; of the trigger-lever o and a fulcrum-pin common to all three levers, and means for depressing the upturned nibs or noses thereof independently of one another, substantially as and for the purpose set forth.

In testimony that I claim the foregoing as my invention I have signed my name, in presence of two witnesses, this 17th day of January, 1896.

CLAUS H. R. CLAUSIUS.

Witnesses:
ALEXANDER SPECHT,
MAX KACMPFF.